THIS DOCUMENT IS THE PROPERTY OF SINOHUA ENGINEERING SOLUTIONS.THE CONTENTS ARE CONFIDENTIAL AND CONSTITUDE TRADE SECRETS PROPRIETARY TO SINOHUA ENGINEERING SOLUTIONS.
NEITHER THIS DOCUMENT NOR ITS CONTENT SHALL BE DISCLOSED TO ANY UNAUTHORIZED PERSON,COPIED OR PUBLISHED WITHOUT SINOHUA ENGINEERING SOLUTIONS'PRIOR WRITTEN CONSENT.

REV.	MODIFICATION.	DATE	DRN
01	PRODUCTION RELEASE	02/02/16	SFH

Order No.	A	A1	B	H	H1	X Material thickness	Clamping force ca. N
KWKCL-2	71,5	79,6	22	14	23,4	1,9 - 2,3	500
KWKCL-4	71,5	79,6	22	14	23,4	3,9 - 4,3	500
KWKCL-6	71,5	79,6	22	14	23,4	5,9 - 6,3	500
KWKCL-8	71,5	79,6	22	14	23,4	7,9 - 8,3	500

Material, version:
Handle and thrust washer fibreglass reinforced PA66 plastic, black.
Hinge pins bright 1.4305 stainless steel.
Locking pin trivalent blue passivated 1.0718 steel.
Spring clip trivalent passivated 1.4310 stainless steel.

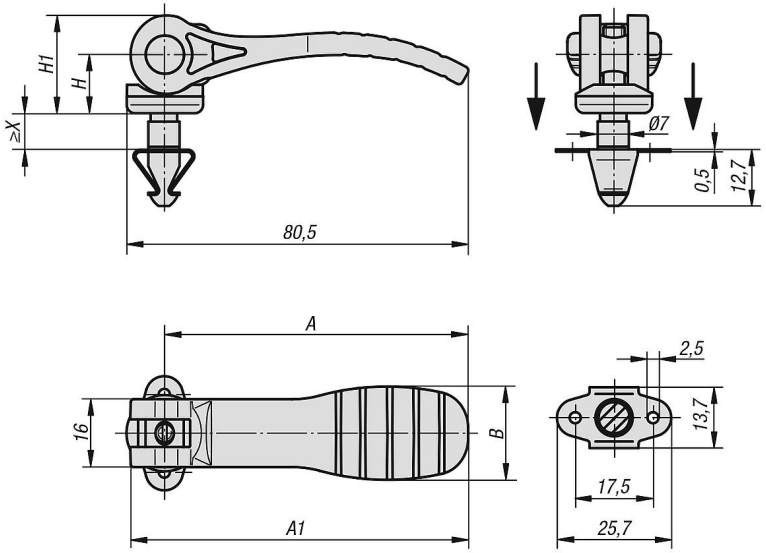

Insert by pushing and clamp by swivelling

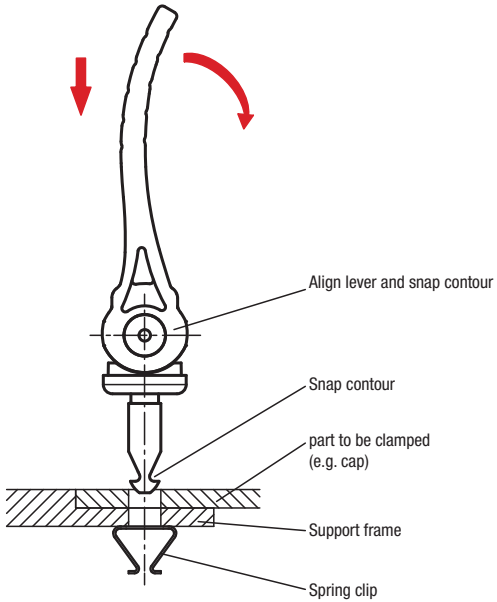

Loosen by swivelling and turning

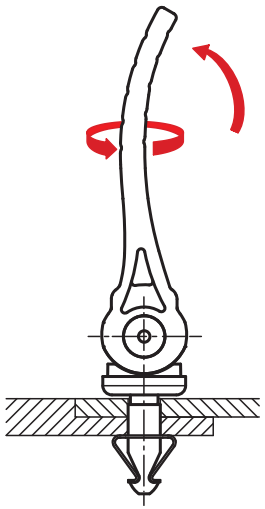

SINOHUA
industrial fastening components
www.sinohua.cn

ALL DIMENSIONS IN mm

GENERAL TOLERANCES ±0.25
UNLESS OTHERWISE STATED
1 DECIMAL PLACE ±0.25
2 DECIMAL PLACES ± 0.10
ANGULAR ±1°

THIRD ANGLE

DESCRIPTION:

QUICK LOCK CAM LEVER

MATERIAL:	COLOUR:	PART No:
SEE TABLE	SEE TABLE	SEE TABLE

DRG No:	PROJECT NUMBER:	Mass:(g)	SHEET SIZE
KWKCL-XX	EU12-0020		A4

DRN	DATE	CHKD	DATE	SCALE	SHEET No.
SFH	03/02/12	TC	03/02/12	NTS	1 OF 1

FORM No. 0145/16