THIS DOCUMENT IS THE PROPERTY OF SINOHUA ENGINEERING SOLUTIONS.THE CONTENTS ARE CONFIDENTIAL AND CONSTITUDE TRADE SECRETS PROPRIETARY TO SINOHUA ENGINEERING SOLUTIONS.
NEITHER THIS DOCUMENT NOR ITS CONTENT SHALL BE DISCLOSED TO ANY UNAUTHORIZED PERSON,COPIED OR PUBLISHED WITHOUT SINOHUA ENGINEERING SOLUTIONS'PRIOR WRITTEN CONSENT.

REV.	MODIFICATION.	DATE	DRN
01	PRODUCTION RELEASE	02/02/16	SFH

阻燃等级: UL94 V0

颜色：默认白色

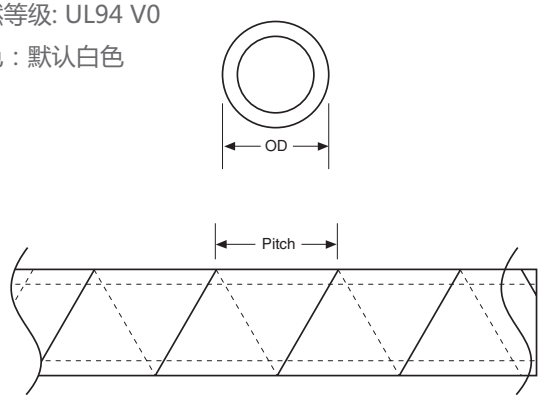

物料编号	推荐线缆直径范围 φ	ID	OD	P	颜色
SWB-1V0	0.8-1.5mm	1.5	3	3	硅胶
SWB-2V0	1-2mm	2.0	4	4	硅胶
SWB-3V0	1.5-3mm	3	5	5.4	硅胶
SWB-4V0	3-4mm	4	6	6.8	硅胶
SWB-5V0	4-5mm	5	7	7.5	硅胶
SWB-6V00	6-8mm	6	8	8.2	硅胶
SWB-6V0	6-12mm	7.0	8	10.8	PA
SWB-8V0	7.5-15mm	8.5	10	11.4	PA
SWB-10V0	9-20mm	10.2	12	13.8	PA
SWB-12V0	12-25mm	13.0	15	15	PA
SWB-16V0	15-30mm	16.4	19	18.2	PA
SWB-20V0	20-40mm	21.0	24	19.6	PA

用于整理、保护电缆、电线和管线，螺旋状的缠绕保护线材、防止磨擦损伤、

物料编号	推荐线缆直径范围 φ
SH-8	6-10mm
SH-10	8-12mm
SH-15	10-16mm
SH-20	15-22mm
SH-25	20-26mm
SH-32	28-32mm

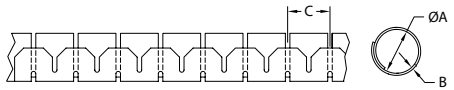

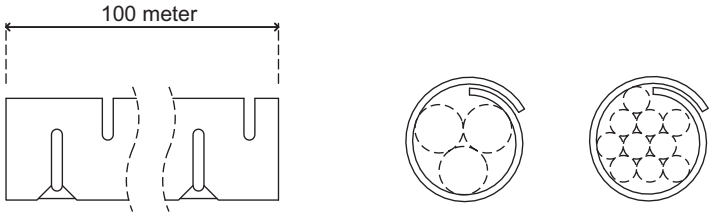

阻燃等级: UL94 HB

颜色： BLACK(BK); WHITE(WH); GREY (GY)

独特的创新型随货小工具安装 ,可以几何倍数的提高缠绕管的安装效率。

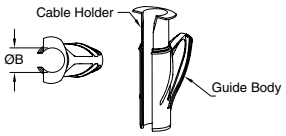

SINOHUA
industrial fastening components
www.sinohua.cn

ALL DIMENSIONS IN mm

GENERAL TOLERANCES ±0.25
UNLESS OTHERWISE STATED
1 DECIMAL PLACE ±0.25
2 DECIMAL PLACES ± 0.10
ANGULAR ±1°

THIRD ANGLE

DESCRIPTION:

SPIRAL WRAPPING PROTECTIVE BAND

MATERIAL:	COLOUR:	PART No:	
SEE TABLE	SEE TABLE	SEE TABLE	
DRG No: 892312	PROJECT NUMBER: EU12-0832	Mass:(g)	SHEET SIZE A4
DRN SFH / DATE 03/02/12	CHKD TC / DATE 03/02/12	SCALE NTS	SHEET No. 1 OF 1

FORM No. 0145/16